TOMAR TV-SERIES
(2000 and 4000 GPD)
REVERSE OSMOSIS WATER TREATMENT SYSTEM
OWNER'S MANUAL

IMPORTANT NOTE

ALL THIN FILM MEMBRANE SYSTEMS REQUIRE THAT THE FEED WATER CONTAIN NOT MORE THAN 0.1 PPM CHLORINE. HIGH CHLORINE LEVELS WIL DAMAGE THE MEMBRANES. FOR CHLORINATED TAP WATER FEED INSTALL A N APPROPRIATELY SIZED CARBON PREFILTER TO PREVENT MEMBRANE DAMAGE DUE TO CHLORINE.

Tomar Water Systems, Inc.
804 North Twin Oaks Valley Road #118
San Marcos, CA 92069

tv2k4kman3

TOMAR TV-4000 SYSTEM

TABLE OF CONTENTS

NOTE

Systems may vary from manual content due to manufacturer's design changes, options or per customer special configuration requests.

System Identification Label

1.0 INTRODUCTION

The Tomar TV Series are the perfect systems for a wide variety of applications. Standard features include: 10 micron inlet filter, SS pressure vessels, low energy membranes, glycerin filled gauges (prefilter and vessel, in and out), multi-stage centrifigal pump, ODP motor, stainless steel tubular frame, low feed pressure cutoff switch and microprocessor control of system functions.

1.1 SYSTEM SPECIFICATIONS

MODEL NO.		**TV-2000**	**TV-4000**
Membrane Type		Thin Film (TF)	Thin Film (TF)
Membrane(s), Vessel(s)		1, 1	2, 2
Production Rate†		2000 gpd (7.6 m^3/d)	4000 gpm (15.2 m^3/d)
Minimum Concentrate flow (discharge + Recirculation)		2 gpm (0.68 m^3/h)	3 gpm (0.68 m^3/h)
Operating Pressure: Nominal Maximum		 150 psi (10.3 bar) 200 psi (13.8 bar)	 150 psi (10.3 bar) 200 psi (13.8 bar)
Nominal Recovery: Without Recirculation Valve With Recirculation Valve		 25% 70%	 40% 70%
Electrical Supplies:	110V 50/60 Hz 1 phase	16.0 A	16.0 A
	220V 50/60 Hz 1 phase	8.0 A	8.0 A
	380V 50 Hz 3 phase	2.2 A	2.2A
	220V 50/60 Hz 3 phase	3.6 A	3.6 A
	480V 50/60 Hz 3 phase	1.8 A	1.8 A
Motor, TEFC, Rating		0.75 HP	1.0 HP
Mult-Stage Centrifugal Pump		12 Stage 316SS Vertical Pump	16 Stage 316 SS Vertical Pump
System Dimensions		49”H x 22.5”W x 25”D (125cm x 57cm x 64cm)	
Dry Weight		110 lbs (50 kg)	130 lbs (59 kg)

† Production rates are based on 150 psig (10.3 bar) net working pressure at 77°F (25°C), running at 15% recovery with feed water at 7.5 pH containing 1500 ppm NaCl. Flow tolerances are ± 15%.

2.0 SYSTEM ITEM IDENTIFICATION (Refer to Figure 1)

1. PRE-FILTER

2. PRESSURE VESSEL/MEMBRANE ASSEMBLY (TV-4000 SHOWN)

3. PUMP AND MOTOR

4. N/A

5. N/A

6. SOLENOID VALVE

7. CONTROL PANEL WITH PUMP MOTOR RELAY

8. BRINE CONTROL VALVE / 21. FLOW METER

10. PRE-FILTER IN/OUT GAUGES

11. VESSEL IN/OUT GAUGES

12. N/A

13. FLOAT SWITCH & PRE-TREAT LOCKOUT LEADS

14. POWER ON/OFF SWITCH

15. LOW FEED PRESSURE SWITCH

16. N/A

17. FRAME

18. LEVELING FEET

19. MICROPROCESSOR CONTROLLER & COND. MONITOR

20. PRODUCT FLOW METER

9. BRINE RE-CIRCULATION VALVE / 22. FLOW METER

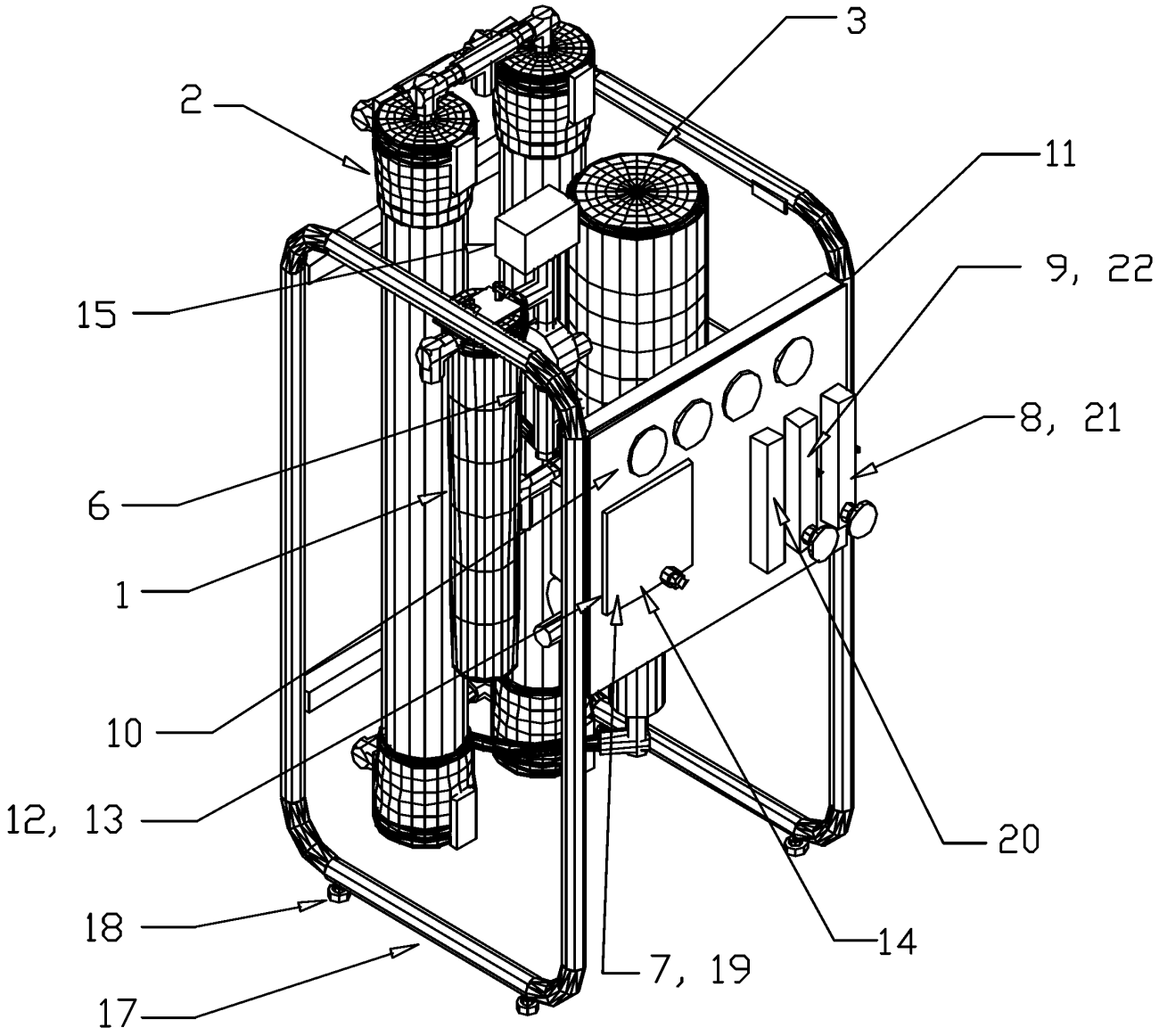

Figure 1. System Configuration, TV-4000 Shown

2.1 SYSTEM ITEM DESCRIPTIONS

PRE-FILTER (#1): Consists of a 20" filter housing that contains a 10 micron sediment cartridge for removal of particulate matter. The filter cap includes the feed water ¾" fnpt inlet port.

PRESSURE VESSEL/MEMBRANE ASSEMBLY(s) (#2): This is where dissolved solids are separated from the feed water. This assembly consists of 1 (2000) or 2 (4000) SS pressure vessel(s) that house the reverse osmosis (RO) membrane(s). SS pressure vessels are standard on both models. For optional pressure vessel construction, see 2.2 SYSTEM OPTIONS.

PUMP (#3): The pump boosts water pressure in the pressure vessel/membrane assembly(s) to about 150 psig (1.03 bar) to ensure high solids rejection and high flow rates. TV-2000 model comes standard with a brass fixed displacement pump, the TV-4000 pump is a multi-stage centrifugal type in 304 stainless steel (SS). Your system may have special requirements for high TDS. For additional pump options, see 2.2 SYSTEM OPTIONS.

MOTOR (#4): Used to drive the pump. Both models utilize a 1.0 HP motor. All motors are totally enclosed and fan cooled (TEFC). For additional motor options, see 2.2 SYSTEM OPTIONS.

MOTOR START POWER RELAY (#5): The relay is rated for the selected motor electrical rating. The relay is activated and de-activated along with the feed water solenoid valve by the microprocessor controller as called for by sensor inputs.

SOLENOID VALVE (#6): Electrically operated valve that prevents feed water from flowing through the system when it is not in operation. The coil and body are separate replaceable units.

CONTROL PANEL (#7): The panel is white ABS. This panel is standard on all units. It provides mounting for the main POWER switch, microprocessor controller, gauges and pressure control valve(s).

BRINE CONTROL VALVE (#8): A needle valve in the brine flowmeter that controls both the amount of water flowing across the membrane(s) that goes to drain and membrane pressure.

BRINE RE-CIRCULATION VALVE (#9): A needle valve in the re-circ. flowmeter that controls the amount of brine from the membrane to be re-circulated back into the feed stream. This feature allows for higher recovery rates, see 3.2.2 OPERATING PARAMETERS for guidance. This valve affects system operating pressure, brine flow rate and TDS.

PRE-FILTER IN/OUT GAUGES (#10): These gauges display the feed water pressure before and after the sediment pre-filter. The operator can use this to observe pressure drop through the filter as a means of detecting filter clogging to know when it is time to replace the element (See Section 7.4). For additiional gauge options, see 2.2 SYSTEM OPTIONS.

VESSEL-IN/OUT GAUGES (#11): These gauges display the operating pressures at the inlet and outlet of the membrane(s)/vessel(s). These pressures are used in the setup of the unit and as an early warning of membrane fouling or degradation. For additional gauge options, see 2.2 SYSTEM OPTIONS.

MICROPROCESSOR CONTROLLER (#12) The PLC controls all functions of the RO System including product conductivity monitoring. The PLC controls the RO system on/off from product tank level, pre-treatment systems with auto backwash and from feed water pressure fault. This on/off function controls the feed water solenoid valve and the main pump. An optional fast flush on startup, tank full or at both times is also available.

If the unit shuts down after turning the power switch on it will be necessary to take corrective action. This condition is usually due to feed pressure momentarily dropping below the low pressure cutoff level and not recovering within the 2-second delay allowed by the controller. If this is the case It will be necessary to either provide increased capacity feed to the RO or to lower the low-pressure switch setting. To adjust the low pressure switch setting see 7.1 LOW PRESSURE SWITCH ADJUSTMENT.

FLOAT SWITCH & PRE-TREAT LOCKOUT LEADS (#13): These leads are two wires wire-nutted together with an orange wire nut. The two sets of wires are stowed below the PLC enclosure. The leads are wire nutted together for setup of the unit without the potential interference of an unplanned shut down. The float switch wires are standard, the pretreat lockout wires will only be available if pretreat lockout is requested at time of system order.

A normally closed (NC) float switch mounted in an atmospheric product storage tank can be connected to the float switch wires. If the tank pressure switch option is selected, the system will come with the switch mounted and the wires already connected.

If they are installed, the two pre-treat lockout wires are to be connected to a micro-switch provided in the auto valve on the selected auto back washing pre-treatment filtration system.

POWER ON/OFF SWITCH (#14): The RO system is completely un-powered when this switch is in the off position.

LOW PRESSURE SWITCH (#15): A pressure switch that shuts off the unit in the event of low pump pressure (filter outlet). This is used as a pump protection device. It is factory set to cut off if the pressure drops to 12 psi (0.8 bar). A minimum of 22 psi (1.5 bar) is required to originally start the RO. The system controller will make three attempts at restarting at one minute intervals if the loss of water pressure was temporary due to some other water usage. If the low pressure condition exists after the three attempts the controller will keep the system shut down until main power is cycled off and then back on. In that case it will be necessary to evaluate the pressure loss situation, make the necessary corrections and then restart the unit.

FRAME (#17): The frame is formed and welded of stainless steel. The pump mounting plate is mild steel, powder coated and bolted in place on the frame. The frame provides a mounting for all the RO system components.

LEVELING FEET (#18): These allow for a stable mounting on an uneven surface. After adjustment of the feet, snug the looking nuts against the under side of the frame.

2.2 SYSTEM OPTION DESCRIPTIONS (Refer To Figure 1)
PRESSURE VESSEL/MEMBRANE ASSEMBLIES (#2): PVC pressure vessels are available.

PUMP MOTORS (#4): Single and 3 phase ,60 or 50 Hz in all standard voltages as dictated by the power at the using facility are available.

GAUGES (#8,9): Gauges are available with 316 SS internals for use with higher TDS water.

POST-FILTER (#24): Consists of a 20" filter housing that contains a GAC cartridge for final polishing of the product water or a calcite cartridge for pH correction. This filter is generally used with pressurized storage systems where product water is stored in a closed pressurized bladder tank. This optional filter is provided separate from the RO system.

TANK PRESSURE SWITCH (not shown): An electrical switch used with a pressurized storage tank that controls the system operation based on the storage tank pressure. This is factory set to shut the system off when the tank pressure is 60 psi (4.14 bar) and turn the system on when the tank pressure is below 40 psi (2.76 bar). See #13 in 2.1 NEW SYSTEM ITEM DESCRIPTION.

PRODUCT WATER CHECK VALVE (not shown, part of the tank pressure switch option): A one-way valve that prevents pressurized product water from flowing back into the desalinator (and possibly damaging the membrane) when the system is off. The product water check valve is only required when using a pressurized storage tank. However, presence of this valve will not affect operation with a non-pressurized storage tank.

TANK FLOAT SWITCH (not shown): Installed in an atmospheric storage tank to control system operation from tank low and tank full. See #13 in 2.1 NEW SYSTEM ITEM DESCRIPTION.

BLENDING VALVE (not shown, option): The blending valve allows the addition of filtered feed water to the product of the RO system. This is done when the product of the RO system is a lower TDS than is necessary or desired. The blending feed water is introduced into the product line before the product water conductivity sensor. In this way, with the system running, it is possible to "dial in" the desired TDS of the product water.

AUTO FLUSH SYSTEM (not shown, option): The auto flush system flushes the concentrated brine from the RO membrane(s) with product water. This reduces the brine to the product TDS level, so that dissolved solids will not migrate through the membrane raising the TDS of the product water. This may be required if the service cycle of the RO system is short. The additional product water usage must be a consideration when sizing the RO system. The flush is automatically performed for a preset period of time at startup or on each automatic shut down of the RO on storage tank full. The flush time can be set from 0 to 4 minutes.

2.3 RO SUPPORT EQUIPMENT (External to the RO)

Cleaning Equipment-Solution tank, pump, filter, hoses, connections, etc.
Product storage, atmospheric or pressurized.
Pre/post-treatment systems.
Product repressurization system, used with atmospheric tank storage.

2.4 SYSTEM CONTROLLER

This system is equipped with a microprocessor controller which monitors several functional conditions and regulates operation of the high pressure pump and control valves. The controller is connected to sensors which, depending on their state, allow the cyclic production of purified water or prevent operation due to abnormal conditions. In the standard configuration the following parameters are monitored and influence system operation:

Feed Water Supply Pressure.
The feed water pressure sensor must detect a pressure of at least 22 psi (1.5 kpa) at the outlet of the system prefilter before the controller will allow the system to start. If the feed water pressure drops below 12 psi (0.8 kpa) during system operation the controller will shut down product water production. After a one minute delay the controller will restart if the feed pressure has risen to 22 psi (1.5 kpa) or higher. If the restart fails for three attempts the controller will cease trying and remain in the standby state and display the ALA message. The OFF-POWER-ON switch must then be turned to OFF and then ON to reset the controller

Product Water Storage Tank Level.
The controller should be connected to a “normally closed” or “pump up” type of tank float switch. The contacts in this switch will be in the closed state whenever the tank water level is below the full level. When the full level is reached, the contacts should switch to open state. The controller will turn the system on to produce water as long as this switch indicates that the product water tank is not full and as long as the other sensor inputs are in a normal state.

Product Water Conductivity.
The controller is connected to a product water conductivity sensor located near the product water outlet connector. The conductivity measurement value will be shown in the controller display during normal operation. If the conductivity value exceeds a preset maximum level the HIGH indicator will light red on the front panel.

Optional Configurations
The system controller may also be monitoring the following optional parameters depending on the options included in the specific system.

Low Feed Water Tank Level
In certain configurations, feed water to the system is supplied by a boost pump drawing from a feed water storage tank. If the proper float switch is installed in this tank the system controller will monitor this switch and if the feed tank level drops below the minimum level the controller will shut down the R.O. system including the boost pump.

High Vessel In Pressure
In certain configurations, particularly with sea water systems which employ a high pressure positive displacement pump, a pressure switch is installed on the high pressure pump outlet. If the pump output pressure exceeds the trip setting of the pressure switch the controller will shut down the R.O. system and display the ALA alarm indication.

Membrane Flush
If the membrane flush option is installed the controller will execute either a feed water fast flush or a product water flush, depending on the selected configuration. The flush mode can be selected for occurrence at either startup or shutdown, or at both startup and shutdown. Refer to the Flush Mode setting instructions later in this manual in paragraph 3.2.3.

3.0 PRE-INSTALLATION PROCEDURES

PLEASE READ CAREFULLY. FAILURE TO FOLLOW THESE PROCEDURES CAN RESULT IN DAMAGE TO YOUR SYSTEM AND VOID YOUR WARRANTY.

3.1 PACKAGING

Upon delivery, inspect for external signs of damage and report any damage to your delivery carrier at that time. After unpacking the system, inspect it carefully for signs of damage. All damage claims should be made to the delivery carrier.

3.2 RO SYSTEM OPERATION

3.2.1 FEED WATER CONSIDERATIONS

Tomar TV-Series are to be used on microbiologically safe water that conforms to operating parameters per 3.2.3 only. The user must be sure that water, to be treated, is both microbiologically safe and non-toxic. Ensure that the operating parameters outlined in 3.2.4 are met at the installation site. Items of most importance are TDS, supply water pressure, flow rate, chlorine level and temperature range.

A water analysis is helpful in determining if any pre-treatment is needed. If your water analysis shows levels of substances in excess of the maximums stated in 3.2.3 or has TDS greater than 500, contact your Tomar factory representative for any pretreatment that may be required, and/or the maximum allowable recovery without pretreatment.

3.2.2 OPERATING PARAMETER SETTINGS

The TV-Series operates according to the following parameters, where:

Qs=Feed water flow rate
Qb=Brine flow rate
Qr=Recirculation flow rate
Qp=Product flow rate
Qro=Flow rate to the RO vessels (pump output)

Qs=Qb+Qp Qro=Qs+Qr Recovery=Qp/Qs

The centrifugal type pumps used in the TV systems run at 3450 rpm for 60 Hz operation and 2875 rpm for 50 Hz operation. Flow decreases with increasing pressure maintaining a constant power requirement (motor Hp output).

The pump pressure is controlled by adjusting the brine flow rate (Qb). Do not close the brine valve any further than is necessary to develop 100 to 150 psi for the low energy membranes and 200 psi for the high rejection membranes. IIn any case, never increase pressure to the extent that the combined brine and re-circulation flow is less than 3 gpm. Concentrate (brine) water flows to the drain. This waste can be reduced by re-circulating some of the concentrate flow back to the pump. The amount of re-circulation (Qr) reduces the amount of feed water (Qs) by the same amount, which increases the rate of recovery. However, recovery should not be greater than 70%. Higher recovery reduces the rejection of salts, which will be observed on a TDS Monitor. Set the re-circulation flow rate (Qr) to the maximum level with the system still producing RO water with an acceptable TDS level. However, for high TDS feed water it is advisable to keep the recovery low to avoid possible fouling of the membrane(s). Tomar can provide a projection from your water analysis to determine safe operating parameters for your system.

3.2.3 CONTROLLER OPERATION

Following are the controller panel indications possible under various system conditions:

SLP = Standby Mode
XXX = Product water conductivity (press C/T button to read cond.)
XX.X = Product water temperature in degrees C (press C/T button to read temp.)
FULL = Product water tank full
PF = Feed water pressure too low. Prefilter is clogged or plant water supply pressure too low.
ALA + HIGH PRESS LED RED = High pressure pump output over limit (optional feature)
ALA + LOW PRESS LED RED **=** Feed water pressure under limit
ALA + LOW FEED PRESS LED RED = Feed water storage tank level low (optional feature)
ALA + HIGH LED AMBER = Product water conductivity over limit

Green LED displays on the controller panel indicate that the parameter is within normal limits or that the element (pump or valve) is active. Flush mode settings may need to be set initially and after any power interruption to the controller. Settings can only be changed when the controller is in the operate mode (conductivity value showing). The settings cannot be changed in the FULL or ALA modes. To change settings on the controller proceed as follows:

1. Press the SET button. The conductivity calibration factor will appear. This value has been factory set and should not be changed.

2. Press the SET button again. The value displayed is the location of the decimal point for the high limit of product water conductivity. If the right arrow button is pressed the decimal point will move to the next right position in the display. If the decimal point is located where it is desired, the C/T button can be pressed once to save this setting.

3. Press the SET button again. The value displayed is the high limit for product water conductivity (in microseimens). Readings above this value will result in an audible alarm as well as an ALA display and red HIGH AMBER LED indication. To change the limit value use the arrow buttons to go up or down. When the value is as desired press the C/T button to save the new value.

4. Press SET until ”aXXX” displays. The right side of the display will now indicate the duration of flush that will occur whenever the system is initially powered up as “aXXX”. The range is from 000 to 249 seconds (4 minutes). If no initial startup flush is desired or if the flush option is not installed set the value to 001 otherwise set the time to the desired duration. When done, press the C/T button to save the value. Factory default setting is 1 second (001)

5. Press SET until “bXXX” displays. The display will now indicate the duration of flush that will occur whenever the system shuts down as “bXXX”. The range is from 000 to 249 seconds (4 minutes). If no shut down flush is desired or if the flush option is not installed set the value to 001 otherwise set the time to the desired duration. This flush will occur when the tank switch indicates full condition and again when the tank switch reaches low position and restarts the system. When done, press the C/T button to save the value. Factory default setting is 90 seconds (090) for a TV-2000 and 120 second (120) for a TV-4000.

6. Press the SET button until “C-XX” displays. The number now displayed as “C-XX” indicates the interval in continuous running that the system will stop and automatically go into a shut down flush, and then resume running after the flush is complete. The value range is 00 to 99 hours. If no automatic flush is desired, set the value to 99 hours otherwise set to the desired interval. Again, this feature is only active if the flush option is installed. If not, set the value to 99. Press the C/T button to save the value. Factory default is 99 hours (99).

3.2.4 OPERATING PARAMETER CONDITIONS

MODEL NO.	TV-2000	TV-4000
Membrane Type	Low Energy TF	Low Energy TF
Feed Pressure	25 psi (1.7 bar)	25 psi (1.7 bar)
Min. Feed Flow Rate (without recirculation)	5.5 GPM @ 60Hz 5.8 GPM @ 50Hz	7.0 GPM @ 60Hz 6.7 GPM @ 50Hz
Maximum Temperature (Feed)	113°F (45°C)	113°F (45°C)
Maximum Chlorine (continuous)	<0.1 ppm	<0.1 ppm
Maximum Total Dissolved Solids	5,000 ppm	5,000 ppm
pH Range	3.0 - 10.0	3.0 - 10.0
Iron	0.0 ppm	0.0 ppm
Hydrogen Sulfide	0.0 ppm	0.0 ppm
Manganese	0.0 ppm	0.0 ppm
pH Range (optimum rejection)	5.0 - 8.0	5.0 - 8.0
Turbidity	< 1.0 NTU	< 1.0 NTU
Silt Density Index	< 5.0 SDI	< 5.0 SDI

3.3 PRE-TREATMENT

For any TV-Series system it is recommended not to use 20" carbon filters alone to de-chlorinate feed water. Especially on the larger TV systems they may be depleted too quickly to properly de-chlorinate the water supply feeding the TF membranes.; For practical de-chlorination an adequate capacity granular activated carbon (GAC) back-washing filter should be used.

4.0 INSTALLATION

PLEASE READ CAREFULLY. FAILURE TO FOLLOW THESE PROCEDURES CAN RESULT IN DAMAGE TO YOUR SYSTEM AND VOID YOUR WARRANTY.

4.1 LOCATION

It is recommended that systems be located where they are protected from harsh environments such as rain, snow and extreme temperatures (both hot and cold). The TV-Series is intended for indoor installation. TV-Series systems can be located just about anywhere inside where there are water and electrical supplies and a drain for the brine discharge. Keep in mind, however, that they should be out of normal traffic patterns but easily accessed for daily monitoring and service. The hazards of flooding in the event of system failure should also be considered in the location selection.

4.2 PLUMBING (see Figure 2)

Always abide by local plumbing codes when installing the system. When installation procedures conflict with your local plumbing codes, STOP and contact your dealer or Tomar. Connect a feed water supply line to the pre-filter inlet (the filter is 3/4” FNPT on the left side). The product and drain line connections are ½” tube QC fittings on the lower rear side of the unit and they are so marked. Connect 1/2” OD tubing at these ports. If the optional PureFlush featuire was ordered there will also be a 3/8” quick connector on the panel at the lower rear of the system. This input should be connected with 3/8” OD tubing to a pressurized source of product water.

4.2.1 WATER SUPPLY CONNECTION

If the supply water is being drawn from a non-pressurized storage tank, a boost pump will be required to overcome filter backpressure and maintain a minimum of 25 psi (1.7 bar) to the pump. When the RO starts there will be a momentary drop in feed water pressure. During this start-up, if the source feed water system can not maintain a pressure above the cutout pressure of the low pressure switch (12 psi), the following options are possible:

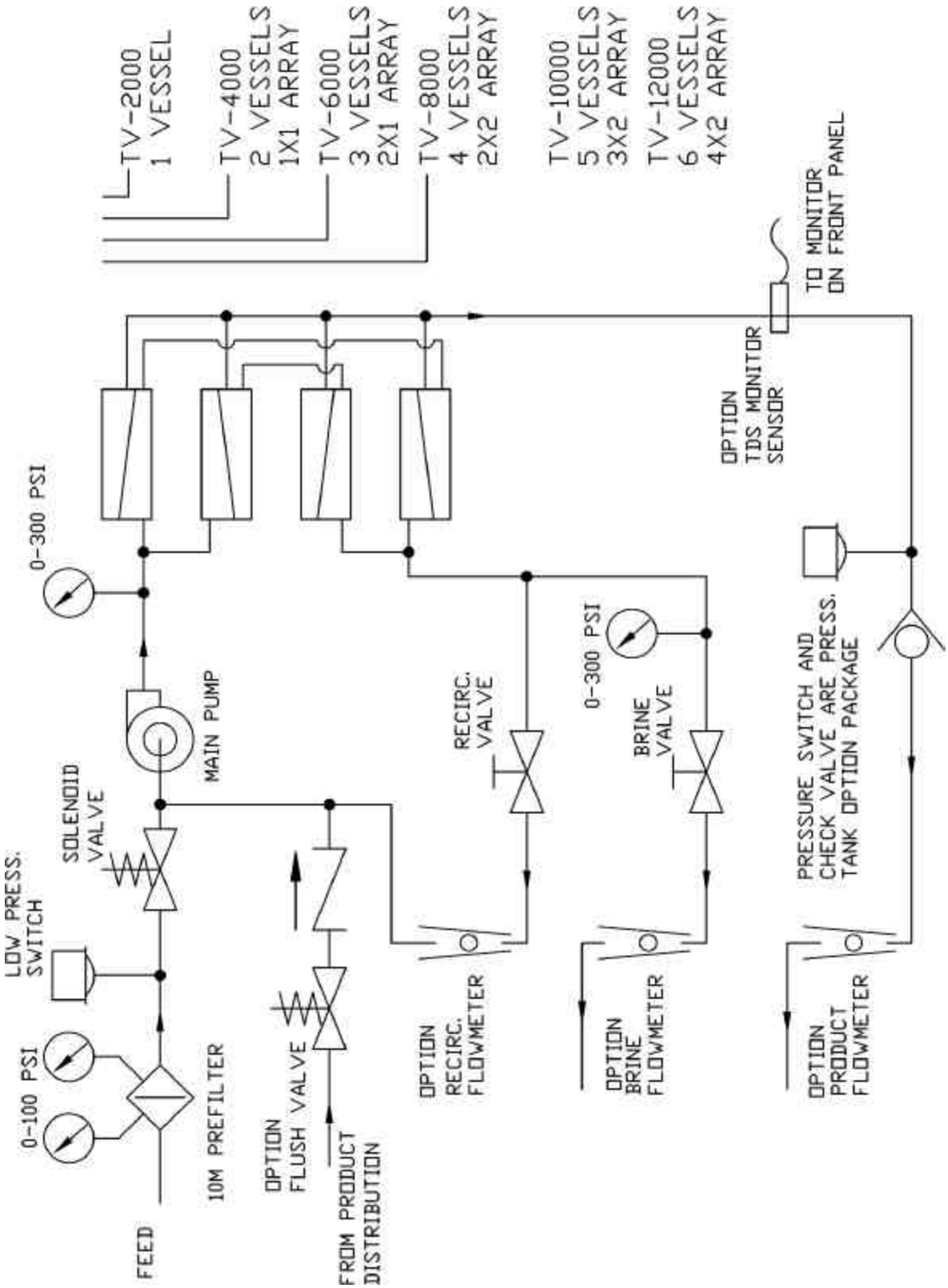

Figure 2. System Plumbing Diagram

1) If the pressure drop is not more than, say, 6 psi below the 12 psi factory setting, the low pressure switch setting can be lowered (See 7.1)
2) A 10-gallon bladder tank can be added at the feed filter inlet to help hold the pressure from dropping below the cutout setting of the LP switch. The bladder tank also reduces recovery time. If the feed pressure drops below the cutout point and can not recover to at least 22 psi quickly the use of the tank will not help.

4.2.2 DRAIN CONNECTION
Run the brine line to an appropriate drain and secure as possible. Be sure to check your local plumbing codes to see if an air gap between the system and the drain is required.

4.2.3 PRODUCT CONNECTION
Connect the ½" OD tubing line to an atmospheric storage system, or if your TV was ordered with the pressure tank switch option you may connect a pressure tank sized per your requirements and the TV system production rate. The product water connection to storage tanks should not be made until the system is flushed and tested as outlined in 5.0.

4.2.4 FLUSH CONNECTION (Optional)
Connect a length of 3/8" tubing from the FLUSH IN connector at the lower rear of the frame to a source of pressurized product water. This can be the output line from a repressurization pump or from the product tank itself if the high water level in the tank is at least 35' above the FLUSH IN connector.

4.3 ELECTRICAL (See Figure 3)

WARNING!
DO NOT CONNECT POWER UNTIL THE SYSTEM IS COMPLETELY INSTALLED AND READY TO RUN. ALL ELECTRICAL WORK SHOULD BE DONE BY A QUALIFIED ELECTRICIAN IN CONFORMANCE WITH ALL APPLICABLE ELECTRICAL CODES.

TV-Series systems come standard with bare power leads for either hard wiring to a disconnect box or for installation of the proper power plug. Be sure the receptacle you use is on a circuit that has a Ground Fault Interrupter (GFI) and has sufficient capacity for the operating current as listed in 1.0 SYSTEMS SPECIFICATIONS.

It is recommended that the unit be installed on a dedicated circuit panel with the correct circuit breaker or fuse sizes installed (see Figure 3). The power cord is so labeled and extends from the front left side of the TV system. Wire leads may be provided for TV-Series control from pre-treatment equipment and your product storage system. Do not connect electrical power to these leads in any way. The wires are red and black. These leads are wire nutted together at the factory. All external switches must be closed for normal operation. These wire leads are tagged for storage tank float switch or pretreat lock out connection. The pretreat lockout wires will only be available if pretreat lockout was specified at time of system order.

The Electrical Schematic is all-inclusive. Your unit may not include all the components shown. Note that on 220V AC power it is required that the ground (green) wire be connected. The TV system controllers operate internally on 110VAC which is obtained from one of the 220V hot legs and the ground wire. If the ground is not connected properly the controller will not function.

4.3.1 EXTERNAL FLOAT SWITCH WIRING
Remove the wire nut from the two (2) leads. Strip approximately ½" of insulation from both wires on the float switch and splice to the TV leads. The float switch must be of the normally closed (NC) type, i.e. when the switch is hanging down the contacts are closed. Remove the wire nut from the l

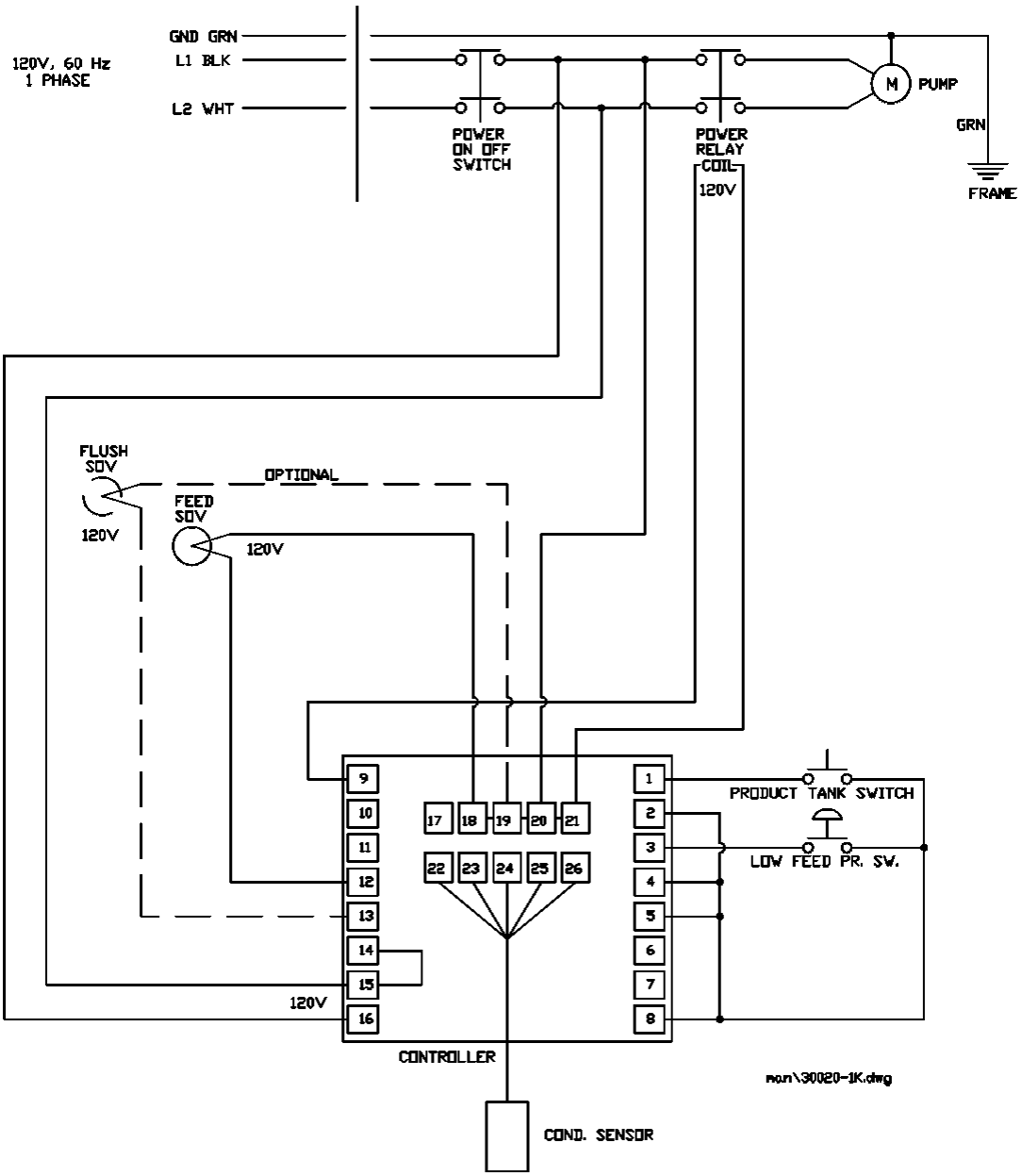

Figure 2. System Electrical Schematic Diagram

eads on the wire marked “Tank Level” and connect to the float switch wires. Wires can be connected either way. If Tomar provides the tank and float switch, the appropriate electrical connection will be provided.

4.3.2 EXTERNAL PRESSURE TANK SWITCH WIRING

If the pressure tank switch option is installed, the tank switch will be mounted on the RO system and the wire leads for external control will be wired into the switch at the factory.

Note: the product water check valve will also be installed. You need only connect the product water fitting to your distribution system and the pressure tank.

If you are providing the pressure tank, check valve and tank switch, the switch must be a normally closed (NC) type. Remove the wire nut from the leads on the wire marked “tank level” and connect to one set of contacts in the tank switch.

4.3.3 PRE-TREAT LOCKOUT SWITCH WIRING (Optional)

The pre-treat lockout switch must be wired through the normally closed set of contacts in the pre-treatment system(s). If there is more than one equipment that must control the TV system on/off, such as a GAC auto back wash filter and, say, a multi-media auto back wash filter, the switches in the auto valves would be wired through the Common and NC terminals, in series, to the RO system controller wires marked “pre-treat”.

Since these contact inputs to the controller are dry contacts there is no wire preference or polarity for making the connections.

5.0 STARTUP, FLUSH AND PERFORMANCE VERIFICATION

Although TV-Series systems are fully tested at the factory prior to shipping, it is strongly recommended to flush and verify your system’s performance on-site, particularly if the unit was not installed soon after delivery.

NOTE

FOR 3 PHASE POWER DO NOT ATTEMPT TO RUN THE SYSTEM BEFORE THE PUMP ROTATION HAS BEEN VERIFIED AS INSTRUCTED BELOW.

5.1 PUMP ROTATION DIRECTION

Every TV-Series is thoroughly tested at the factory prior to shipment with either single phase or 3-phase power, depending on customer specification. If 3-phase power is specified then proper power phasing must must be configured at the installation site for proper pump rotation. With the water supply on, turn the power switch on, then the controller power on momentarily, and check the direction of rotation of the pump. For 3-phase power there will be a direction of rotation arrow on the body of the pump. Observe rotation of the motor at the top end. If rotation is in the wrong direction, reverse any two of the 3-phase power leads at your fused disconnect.

5.2 INITIAL STARTUP AND FLUSHING

New membranes have a preservative on them that should be flushed before use. Although the system was run at the factory, additional flushing is recommended. Run the product line to a drain and run the system until the product TDS has stabilized.

Close the RECIRC control kob full clockwise. Open the BRINE control know full counter-clockwise.

Turn on the water supply to the unit and check for leaks up to the solenoid valve.

Turn OFF-POWER-ON switch to ON.

After the system has run for a few minutes turn the BRINE valve clockwise until the VESSEL IN pressure gauge reads 150 psi (10.3 bar) or a product flow rate of 1.4 gpm (525 ml/min) for the TV-2000 or 2.8 gpm (1051 ml/min) for the TV-4000.

Allow the system to flush for about 5 minutes then slowly open the RECIRC control knob counter-clockwise until the RECIRC flow meter indicates about 3 GPM. This will cause the VESSEL IN pressure to decrease. Now close the BRINE knob and open the RECIRC knob together so that the VESSEL IN pressure remains about 150 psi and stop when the BRINE flow meter indicates about 1 GPM for a TV-4000 or 0.6 GPM for a TV-2000. At this point the PRODUCT flow meter should indicate about 1.4 GPM for a TV-2000 and 2.8 GPM for a TV-4000. Keep in mind that these BRINE and PRODUCT flow rates are based on typical 500 ppm feed water and 77 degree water temperature. Lower temperatures or higher ppm feed water wil reduce the PRODUCT flow rate and require higher BRINE flow rates. For cold and/or high ppm feed water the VESSEL IN pressure may be raised to a maximum of 200 psi by reducing RECIRC flow while maintaining BRINE flow. **DO NOT OPERATE THE SYSTEM WITH BRINE FLOW LESS THAN THE EXAMPLE RATES GIVEN ABOVE OR MEMBRANE FOULING WILL OCCUR**. Refer to the production test sheet at the end of the manual for typical operating settings.

5.3 PERFORMANCE VERIFICATION

Factory test data is supplied with the system. This data reflects unit performance with municipal water available at the factory. To ensure optimum performance, on-site data should be taken and compared to the factory test data. This data should be taken after the system has been flushed. Some deviations may be seen due to differences in feed water TDS and temperature between the site and factory. If you have already connected the product line to the tank, you will need to disconnect it ahead of the post carbon filter (if one is installed) to take product samples.

5.3.1 RECOVERY

Compute the recovery according to the following formulas: Recovery = Qp/Qs where Qs=Qb+Qp, as discussed in 3.2.2 OPERATING PARAMETERS.

5.3.2 REJECTION

This testing is needed only if the unit is not equipped with the standard TDS meter. Using a conductivity meter (TDS meter) measure the TDS in both the feed water and the product water. Calculate percent rejection using the formula below:

(Feed TDS-Product TDS) / (Feed TDS)* 100 = % Rejection

Rejection should be 96% or better. For example, where the feed TDS is 600 and the product TDS is 24, the percent rejection is:

(600-24)/ 600*100 = 96%.

5.3.3 LOW PRESSURE SWITCH TEST

While the system is running, slowly shut off the water supply to the system. The system should shut off at about 12 psi on the filter out gauge. If the system does not shut off by at least 7 psi, reestablish the water supply. **DO NOT LET THE SYSTEM RUN WITHOUT AN ADEQUATE WATER SUPPLY TURNED ON. PUMP DAMAGE WILL OCCUR.** Turn the system off and refer to 7.1 for low-pressure switch adjustment. Be sure to test the installation of the float switch by manually tipping the switch up and down. The unit should turn on and off as you tip the switch. Improper float installation could result in an overflow of the tank.

Make the tank connection as outlined in 4.2.3.

5.3.4 OPTIONAL TANK PRESSURE SWITCH TEST

With the product line connected to the tank and usage demand on, and with the TV system running, slowly close the usage demand. The tank pressure gauge should start to rise as the tank fills. The system should shut off when the gauge reads about 60 psi (4.2 bar). Now, by opening the usage demand the tank pressure should begin to drop, and the system should turn on when the pressure drops below about 20 psi. If the system fails to shut off at 60 psi, watch the gauge and be sure that it does not rise above 70 psi. If it reaches 70 psi, turn the main TV power switch to off. Refer to 7.2 for tank pressure switch adjustment.

5.3.5 OPTIONAL FLOAT SWITCH TEST

The system should run when the float is hanging down by the cord (not in contact with water). Tilt the float switch up to its highest position so the cord is at the bottom of the float. The unit should shut off. If the unit does not shut off, re-check installation as outlined in 4.3.1. Improper float installation could result in an overflow of the tank or too frequent start and stop of the pump.

5.3.6 OPTIONAL BLENDING SYSTEM

Start the RO with the valve closed. The TDS meter is reading the product water quality as produced by the RO system. Allow the TDS to stabilize, then gradually open the blending valve allowing time for the new TDS reading to stabilize. Adjust the valve to product the desired product TDS.

5.3.7 OPTIONAL AUTO FLUSH SYSTEM

The auto flush is normally set at 1.5 minutes. Check operation by simulating a tank full condition (example, tilting the float switch up in an atmospheric tank). Maintain the switch in the tank full position and time to verify the timing setting. When the switch is returned to a tank low condition after the 5 minute period the system will restart.

6.0 MAINTENANCE

Tomar TV-Series systems are designed for simple operation with minimal user intervention. Tomar recommends keeping accurate performance records and following a regular preventive maintenance schedule to maximize the life of your system. A performance record sheet is provided at the back of this manual for you to copy and keep near your system. This record sheet will be important for warranty verification and trouble shooting, as well as possibly suggesting more or different pre-treatment.

6.1 DAILY SYSTEM CHECKS

Your water supply pressure can vary from time to time. This can also affect your system operating pressure. Therefore, it is recommended to check and adjust your system pressure daily to ensure maximum water production rates and quality. Check both the water supply pressure gauge (Filter In gauge) and the Filter Out gauge. Under normal conditions, there should be a 3-5 psi difference between the two gauges. When the difference reaches 10 psi, a pre-filter change is recommended. See 7.4 for further discussion on cartridge replacement.

6.2 SEMI-ANNUAL SERVICE

If you do not see a pressure drop on the Filter Out gauge as indicated in the Daily System Checks, it is recommended to change the filter cartridge at least every six months.

6.3 PERIPHERAL EQUIPMENT

Peripheral equipment such as pre-filters, post-filters, and tanks, external to the TV, may also have periodic maintenance requirements. It is essential to maintain these as they can have a dramatic effect on the performance of your system. Refer to their specific manuals for proper maintenance procedures.

7.0 SERVICE

7.1 LOW PRESSURE SWITCH ADJUSTMENT

The low pressure switch is factory set to turn the system off if feed pressure drops below 12 psi (0.8 bar) and will re-start the system when feed pressure reaches 22 psi (1.5 bar). This switch can be adjusted to as low as 4 psi (0.3 bar), called the cut-out setting (stop). The cut-in (start) adjustment can be set as high as 45 psi (3.1 bar). The difference between the two settings is referred to as differential. The low-pressure switch on TV systems has a differential of 6-20 psi (0.4-1.4 bar).

- Before servicing, always disconnect power to the unit to avoid shock.
- To adjust, remove the switch cover and refer to the diagram inside.
- Turn the tall center adjustment nut counterclockwise to decrease cutout pressure and clockwise to increase cutout pressure. This adjustment will also change cut-in pressure to maintain the same differential pressure.
- Turn the lower side adjustment nut counterclockwise to decrease cut-in pressure and clock wise to increase cut-in pressure. Under normal circumstances, it is not necessary to adjust this switch setting. This adjustment does not change the low cut-out setting.
- Replace cover, restart and check operation of the switch.

7.2 TANK PRESSURE SWITCH ADJUSTMENT

The tank pressure switch (if equipped) is factory set to turn the system off when the tank pressure reaches 60 psi (4.2 bar) and then restart when the tank pressure drops below 40 psi (2.8 bar). The cut-in can be set as low as 5 psi (0.3 bar) and the cut-out can be set as high as 65 psi (4.5 bar). The differential range is limited to 15-30 psi (1.0-2.0 bar). Before servicing, always disconnect power to the unit to avoid shock.

- To adjust, remove the switch cover and refer to the diagram inside.
- Turn the tall center adjustment nut counterclockwise to decrease cutout pressure and clockwise to increase cutout pressure. This adjustment will also change cut-in pressure to maintain the same differential pressure.
- Turn the lower side adjustment nut counterclockwise to decrease cut-in pressure and clock wise to increase cut-in pressure. Under normal circumstances, it is not necessary to adjust this switch setting. This adjustment does not change the low cut-out setting.
- Replace cover, restart and check operation of the switch.

7.3 MEMBRANE REPLACEMENT (See Figures 4,5)

Tomar recommends membrane replacement when the TDS rejection falls below 70%. A properly maintained and operated system typically will have a two (2) year service life. Your system may require more frequent membrane changes depending on your feed water. Always flush new membranes as outlined in: 5.2 INITIAL START AND FLUSH.

- Close feed water valve and release pressure from system by turning the POWER switch to ON. The system will start and then shut down as it releases the remaining feed pressure.

- Before servicing, always disconnect power to the unit to avoid shock.
- Tag and disconnect the three tubing connections on the desalinator. These are the feed, concentrate (brine) and product (permeate) lines.

- Remove the vessels from the frame by removing the outer half of the retaining clamps. Move the vessels to a convenient work area.

- For the SS vessels (figure 5) remove the half clamps. If optional PVC vessels are installed (figure 4) remove the end plug retaining ring by pushing the nubbin on the ring toward the center of the vessel and working around to remove it from the groove in the vessel.

- In the next step, it is best to remove the membrane in the direction of flow as labeled on the outside of the vessel.

- The end plugs are not easily removed. On the end where product is removed, you may remove the fitting and install a short piece of pipe with a tee on the end as a puller. With one plug removed push the membrane out the other way to remove the other plug and the membrane. Also try pushing the plug at one end to move both plugs and the membrane, then with one plug removed push the membrane and one plug the other way for removal.

- Discard old membranes. Or, if in good condition, it may be worthwhile to have the membranes cleaned, sanitized and stored for use when the installed set are ready to be re placed.

- Clean vessel and plugs with a mild detergent soap and rinse thoroughly.

- Inspect all O-rings for cracks or nicks. Replace as necessary. Lubricate O-rings with an appropriate petroleum or silicone based-lubricant and re-install on all adapters and end plugs.

- Lubricate the brine seal on the inlet end of the new membrane. Install new membrane into the feed end of vessel in the direction shown in Figures 4 or 5. Note the brine seal end.

- Install end plugs into their proper ends. IF END PLUGS ARE INSTALLED ON THE WRONG ENDS, THE SYSTEM WILL NOT OPERATE PROPERLY.

- Install the half clamps or ,for pvc vesselv, retaining rings (and product fittings if removed).

- Mount desalinator(s) in frame. Do not over tighten the clamp retaining screws. Use a board to support the vessel(s) off the floor and above the bottom of the frame. Connect feed, concentrate, and product lines to their proper ports.

7.4 SEDIMENT FILTER CARTRIDGE REPLACEMENT

- Before servicing, always disconnect power to the unit to avoid shock.
- Close feed water and tank valves.
- Relieve pressure in system.
- Remove pre-filter sump by turning clockwise (as viewed from the top). A filter wrench may be necessary.
-

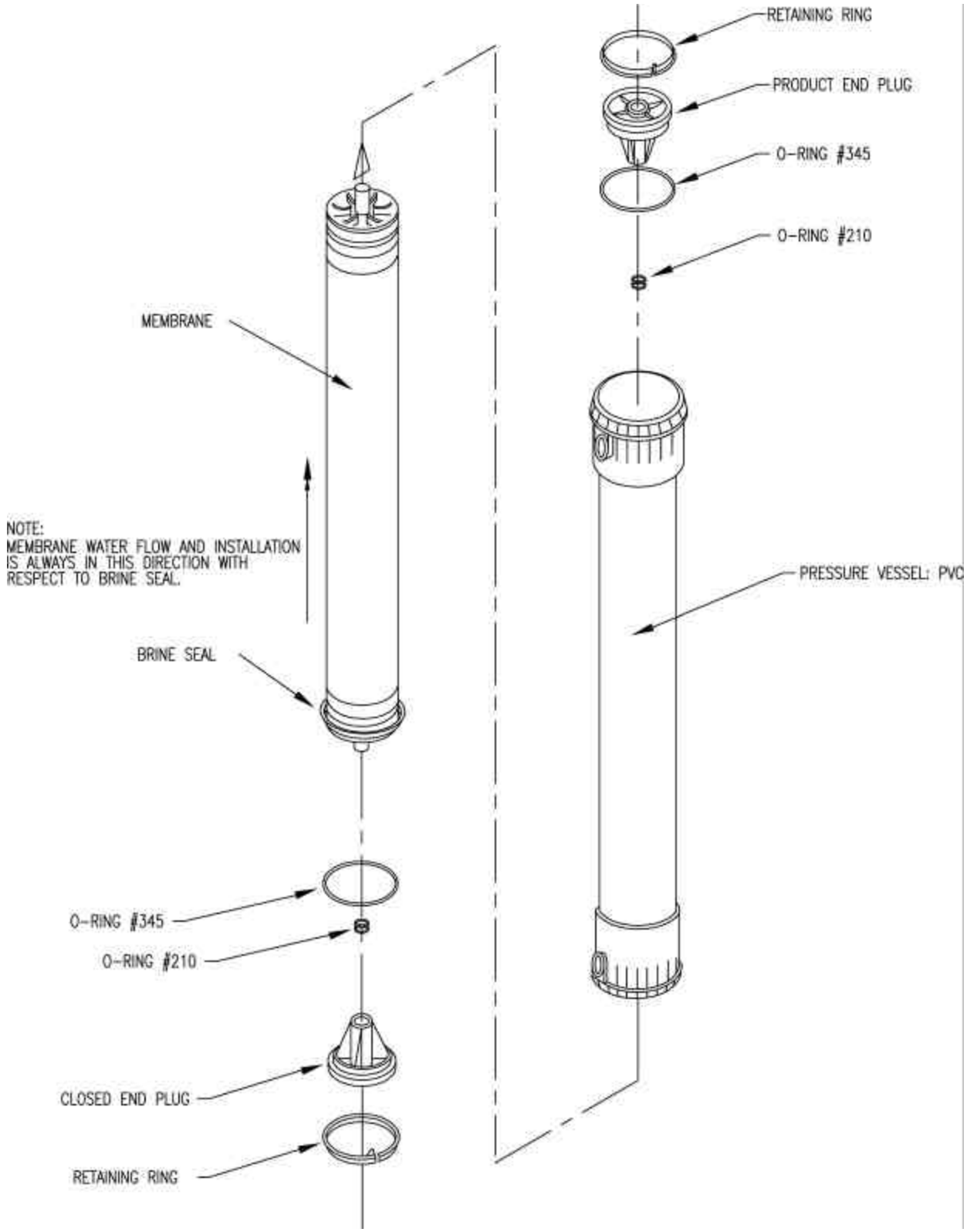

Figure 4. PVC Vessel/Membrane Assembly

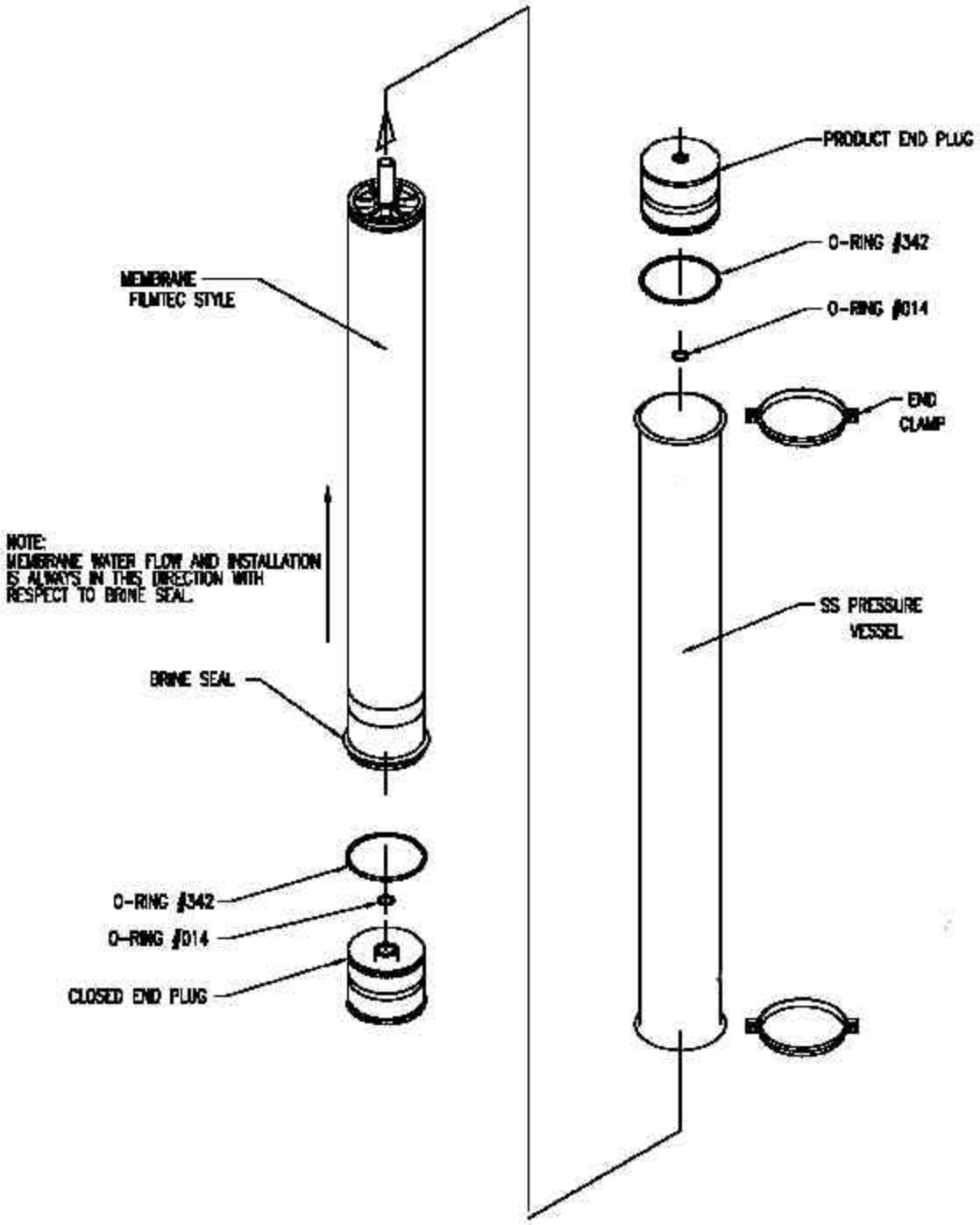

Figure 5. Stainless Steel Vessel/Membrane Assembly

Remove cartridge and inspect. If cartridge is extremely silted, you should consider changing more often. Discard old cartridge.

- Remove o-ring from seat in sump and inspect for cracks or nicks. Replace as necessary.
- Inspect sump for cracks, especially in the threaded area. Replace as necessary.
- Lubricate o-ring with an appropriate silicone-based lubricant. Install o-ring into its seat in sump.
- Install new sediment cartridge.
- Replace sump by screwing it into cap in a counter-clockwise direction (as viewed from top). A wrench should not be needed. Hand tightened is sufficient.
- Restore water and power; check for leaks.

7.5 POST-FILTER CARTRIDGE REPLACEMENT (if equipped)

- Before servicing, always disconnect power to the unit to avoid shock.
- Close feed water and tank valves.
- Open a usage faucet to relieve pressure from the post filter.
- Remove post-filter sump by turning clockwise (as viewed from the top). A filter wrench may be necessary.
- Remove and discard old cartridge.
- Remove o-ring from seat in sump and inspect for cracks or nicks, replace as necessary.
- Inspect sump for cracks. Replace as necessary.
- Lubricate o-ring with an appropriate silicone based lubricant. Install o-ring into its seat in sump.
- Install new carbon cartridge with the white rubber ring up.
- Replace sump by screwing it onto cap in a counter-clockwise direction (as viewed from top). A wrench should not be needed. Hand tightened is sufficient.
- Restore water and power; check for leaks.

Note: New carbon cartridges need to be flushed after being installed. After installation, open faucet to allow tank water to flush out carbon fines. This water will be black at first. Allow to flush until water runs clear.

8.0 PLANT SHUTDOWN

RO systems require brine replacement for short or long-term shutdown. The duration between flushes depends on feed water, usage conditions, and type of unit and duration of the shutdown.

The shutdown procedure should be performed at a minimum every 3 weeks. Higher TDS feed water and/or the system located in elevated temperatures may require the shutdown procedure to be performed weekly.

If there is a chance of microbial activity in the water the shutdown procedure should be performed at least weekly.

8.1 SHUTDOWN PROCEDURE

Before making any of the valve changes indicated below, run the system and record the operating pressures and flows. This will aid in putting the unit back in service in the future.

For subsequent periodic flushes, leave the valve settings as directed below and reinstall the feed water sediment filter and flush as directed.

To get the maximum flushing conditions, turn on the system then close the re-circulation valve and fully open open the brine valve. This flow will flush the brine out of the membrane(s) and will produce a small product flow. For systems with atmospheric tanks, the product will flow to the tank. For systems with pressure tank storage, dump the pressure in the tank to zero so product flow can occur. Allow feed water to flow for at least 5 minutes for the TV-2000, to 10 minutes for the TV-4000. After this period, close the valve that provides feed water to the system. Within a few seconds the low feed pressure switch will open and shut down the system. Turn the POWER switch to OFF.

Remove the sediment filter housing and element. Dump the water and set the filter element aside to drain and dry. The sediment filter must be reinstalled for each subsequent flush.

Observe the product and brine water at the beginning of the flush operation. If either the product or brine seem to be fouled, a more frequent flushing is indicated.

8.2 RESTART PROCEDURE

Perform a flush cycle as indicated above (with feed water sediment filter installed). Turn the RO system on and adjust brine and re-circulation valves to produce the original operating pressure and flow conditions.

9.0 PARTS, ACCESSORIES AND SPARES

Where the spares schedule is shown at the group heading, determine the component installed in your RO unit. We recommend spares be available after the time indicated. Some components scheduled for spares are for options, different voltages or 50 Hz units. Ensure the spares you choose are applicable to your RO system. Feed water conditions may indicate more frequent replacement, particularly for filtration and membranes.

SPARES SCHEDULE

PUMPS		1 year
107453	TV-2000, 12 Stage Pump & Motor	
107454	TV-4000, 16 Stage Pump & Motor	
Consult factopry for special and 3-phase pump part numbers		
VESSELS		3 years
101216	Vessel Assy, 4”ODx40”L, SS, End Cap Clamp, FT Style	
101910	Mounting Clamp	
100083	O Ring Kit	

MEMBRANES		2 years
107712	Membrane, 4040, TF, ESPA1, FT style, Low Energy	
107787	Membrane, 4040, TF, ESPA2, FT style, Low Energy	
MONITORING AND CONTROL		
102880	Feed Solenoid Valve, 3/4”, 220VAC	2 years
102913	Feed Solenoid Valve, 3/4”, 120VAC	2 years
105818	Flush Solenoid Valve, 3/8”, 220VAC (Auto Flush System)	2 years
105811	Flush Solenoid Valve, 3/8”, 120VAC (Auto Flush System)	2 years
105285	Gauge, 100 psi, 2.5”, SS Case, Bronze Int., Glycerin Filled	2 years
101275	Gauge, 300 psi, 2.5”, SS Case, Bronze Int., Glycerin Filled	2 years
100684	Gauge, 100 psi, 2.5”, SS Case, SS Int., Glycerin Filled	2 years
101940	Gauge, 300 psi, 2.5”, SS Case, SS Int., Glycerin Filled	2 years
105030	Switch, Tank, (NC), 40-60 psi	2 years
105031	Switch, Low Pressure, (NO), 12-22 psi	2 years
101961	Flow Meter, 0-5 gpm, Acrylic Block, Panel Mnt.	
103956	Flow Meter, 0-5 gpm, Acrylic Block, Panel Mnt., With Valve	
105991	Controller, R.O. System	3 years
FILTRATION		
100552	Housing/Cap Assy, 20”, ¾”fpt ports	
105191	Filter Cartridge, 20” Sediment, 10 micron	3 months
100300	Filter Cartridge, 20” Sediment, 20 micron	3 months
103355	Filter Cartridge, 20” Sediment, 1 micron	3 months
100299	Filter Cartridge, 20” Post Carbon	3 months
102669	Filter Cartridge, 20” Post Calcite	3 months
MISCELLANEOUS		
107151	Frame, TV-2 & 4K, Stainless Steel	
107157	Panel, Main, ¼” white ABS	
107161	Plate, Pump Mnt, Steel with White Powder Coat	
102571	Foot, Adjustable, 1/4-20 x 1 1/4” Stem	
ELECTRICAL		
102411	Pump Motor Relay, 220VAC	1 year
105281	Pump Motor Relay, 120VAC	1 year

TOMAR LIMITED ONE YEAR WARRANTY
FOR LIGHT AND COMMERCIAL INDUSTRIAL SYSTEMS

EXTENT OF WARRANTY COVERAGE

The Tomar Limited Warranty extends to the original purchaser of the system. This warranty covers all parts and factory labor needed to repair any Tomar-provided item that proves to be defective in material, workmanship, or factory preparation. The warranty applies for the first full year from date of purchase. Items subject to normal maintenance, such as o-rings, filter elements, etc. are not covered under this warranty. Items replaced under warranty will be warranted for a period of one year from the date of return shipment of the repaired or replacement unit to the owner.

DISCLAIMERS

This warranty applies if the system is installed and used in compliance with the instructions enclosed with the system.

This warranty does not cover the cost of repairs or adjustments to the unit, that may be needed, due to the use or installation of improper parts, equipment, or materials. This warranty does not cover unauthorized alteration of the unit or failure of a unit caused by such alteration or by unauthorized repairs.

The Tomar Limited Warranty does not cover malfunctions of your unit due to misuse, alteration, lack of regular maintenance, misapplication, tampering, or operating at too high a recovery. In addition, damage to the unit due to fire, accident, negligence, act of God, or events beyond the control of Tomar are not covered by this warranty.

Tomar warrants the membranes per the manufacturers' warranty. These warranties generally cover faulty material and workmanship for anywhere from 1 to 3 years. Membrane and pre-filter and post filter cartridge fouling will not be covered. The manufacturers' warranty of elements selected will be provided on demand.

Tomar warrants all items supplied by outside vendors, that are used as part of the system provided, per the manufacturer's warranties. These warranties generally cover faulty material and workmanship for 1 year.

INCIDENTAL AND CONSEQUENTIAL DAMAGES

Tomar will not assume the responsibility for payment of incidental or consequential damages, such as lost time, inconvenience, damage to personal property, loss of revenue, commercial losses, postage, travel, telephone expenditures, or other losses of this nature, which result from failure of this unit to comply with expressed or implied warranties.

OWNER'S WARRANTY RESPONSIBILITIES

Under the provisions of this warranty, the owner is expected to timely perform regular maintenance on the unit, as explained in the Tomar Operating and Maintenance Guide. Neglect, improper maintenance, abuse, or unapproved modifications may invalidate this warranty. Should the unit develop a defect or otherwise fail to perform within the provisions of this warranty, you must notify your Tomar dealer or Tomar directly.

In order to process your claim in a timely manner a Returned Goods Authorization (RGA) number will be assigned. Include the RGA number, with an explanation of the observed defect, with the item being returned. Items returned under the RGA will be reviewed by Tomar or forwarded to the original manufacturer for evaluation. Items returned to Tomar must be sent prepaid.

CHEMICAL INJECTION RATE CALCULATION

First it is necessary to determine the Feed Flow rate to the RO system. This is the product flow rate which the RO will produce, divided by the overall % recovery:

The chemical injection pump performance is determined by by rate and stroke settings.

For example, say the RO is designed to produce 10,000 gpd and it will be set to operate with or without re-circulation at 60% recovery:

The Feed Flow rate is 10,000/0.60=16,667 gpd.

A good rule of thumb is to inject anti-scalant at a rate of 3 to 5 ppm. For our sample calculation we will use 5 ppm.

The required chemical injection pump flow rate is 16,667*5/1,000,000=0.083 gpd. For a 5% dilute solution the required pump flow rate is 0.083/0.05 = 1.66 gpd.

The smallest pump has a range of 0.06 to 6.0 gpd. Our required injection rate is right at lower half of the pump range. It is best to run the injection pump not lower than about 5% of maximum, for this pump about 0.3 gpd. Also, the higher the pump rate the more even the injection flow rate to the feed stream will be.

The anti-scalant can be diluted, but not to a lower concentration than 5%. For our example we will use 5%. Our solution tank has a 15 gallon capacity. We will plan on putting in 15 gallons total. The dilution mixture will be 15*0.05=0.75 gallons of anti-scalant with 15*.95= 14.25 gallons of water.

Dilution should always be with RO product water however, water bottled for drinking is adequate.

Now for pump injection rate settings. The pump has adjustments for rate and stroke length. Both scales are in %.

The final pump setting will be for the 1.66 gpd anti-scalant at 5% dilution. Pump flow rate is 0.083/ 0.05 = 1.66 gpd.

Having the rate higher than the stroke will give a more even injection flow to the feed flow.

TWe select a 40% setting for the stroke, which gives a pump flow of 6.0*0.4=2.4 gpd.

The rate setting then, is 1.66/2.4=0.69 or 69%.

PERFORMANCE RECORD

DATE	PRE-FILTER IN	PSI	OUT	FEED WATER PPM	TEMP.	PRODUCT GPM	PPM	VESSEL IN	PSI	OUT	BRINE GPM	RCVRY.	REJ. %